SERVICE MANUAL

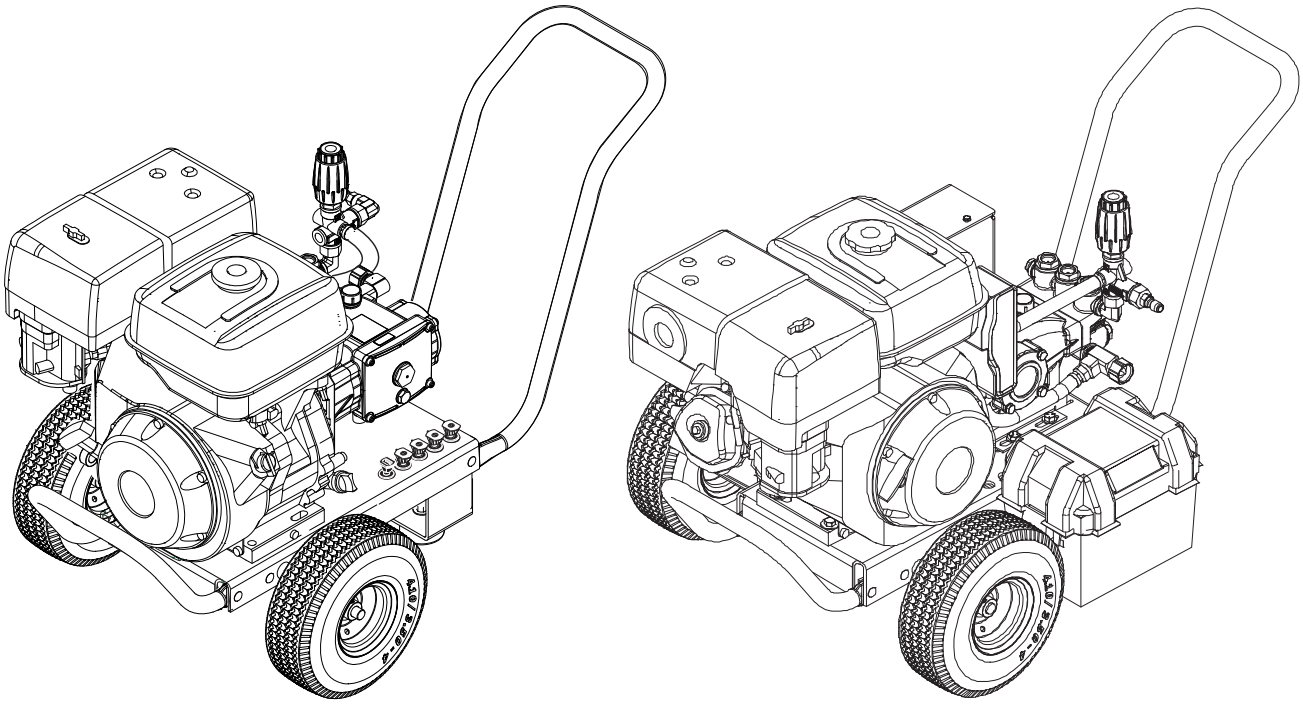

MODEL #	ORDER #
HD 3.0/27 G	1.107-270.0
HD3.0/27 GB	1.107-271.0
HD 3.4/35 G	1.107-272.0
HD 3.3/35 GB	1.107-273.0
HD 4.0/40 G	1.107-274.0
HD 4.0/40 GB	1.107-275.0
HD 4.0/40 Ge	1.107-276.0
HD 4.0/40 GeB	1.107-277.0

9.801-760.0

EXPLODED VIEW

For Models: HD3.0/27 GB, HD 3.3/35 GB, HD 4.0/40 GB, HD 4.0/40 GeB

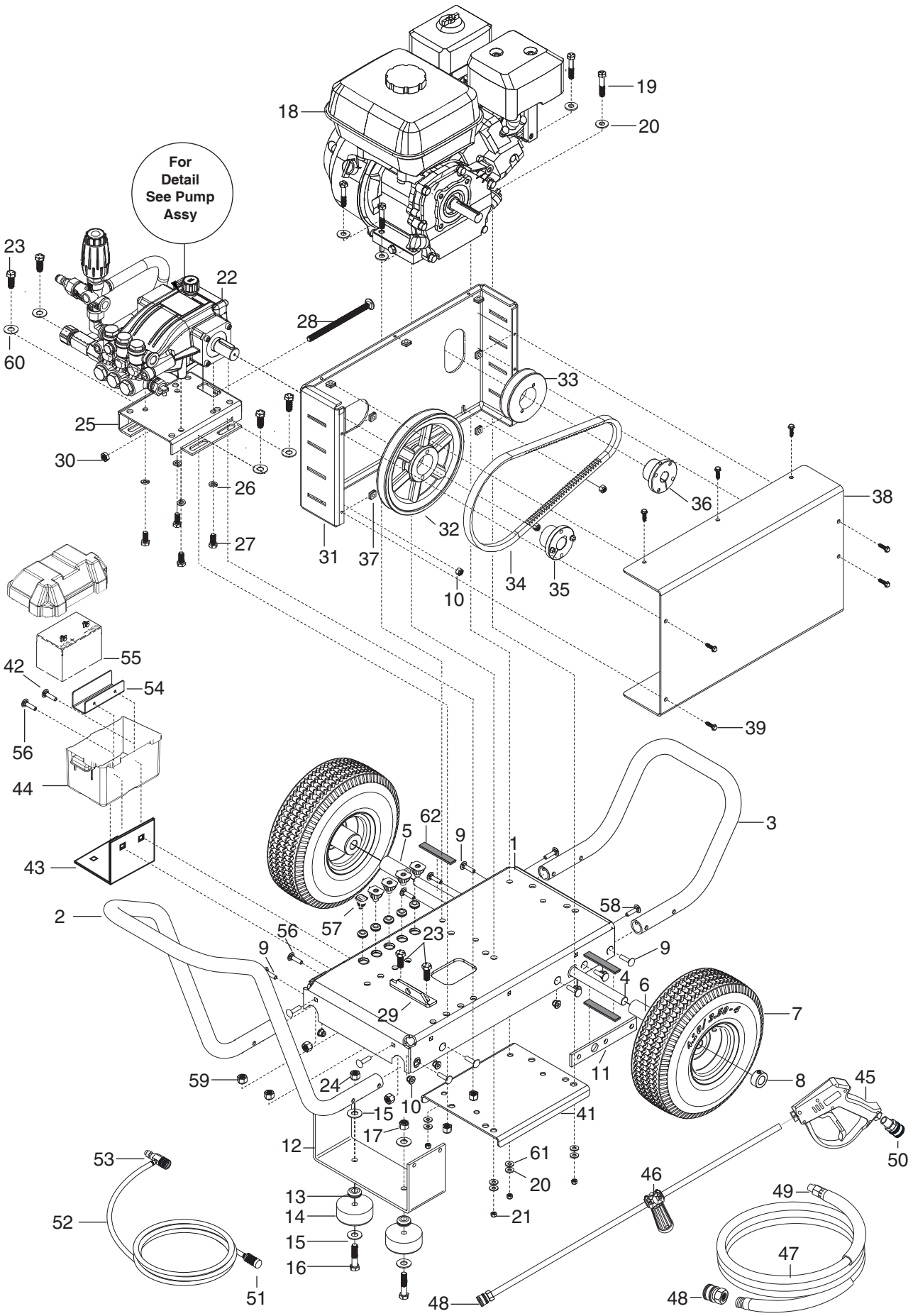

EXPLODED VIEW PARTS LIST

ITEM	PART NO.	DESCRIPTION	QTY
1	8.924-117.0	Al Base Belt Drive CW	1
2	8.924-394.0	Al Handle CW	1
3	8.924-393.0	Al Bumper Flat End CW	1
4	8.924-089.0	Axle CW Base AL 23" Long (HD 3.3/35 GB, HD 4.0/40 GB, HD 4.0/40 GeB)	1
	8.631-285.0	Axle, Dia .625, Frame, 21" l (HD 3.0/27 GB)	1
5	8.924-072.0	AL Spacer Tube DD Frame CW (HD 3.3/35 GB, HD 4.0/40 GB, HD 4.0/40 GeB)	1
	8.924-121.0	Al Spacer Tube BD Frame CW (HD3.0/27 GB)	1
6	8.924-124.0	Al Spacer Tube BD Frame CW	1
7	8.711-898.0	Wheel & Tire Assy,4"Rteel Rim,Flat Pro	2
8	9.802-782.0	Collar, 5/8" Bore Shaft 3010	2
9	9.802-706.0	Bolt, 1/4"-20 x 1-3/4" Carriage Zinc	8
10	9.197-010.0	1/4-20" Nylon Insert Lock Nut with Flange	17
11	8.924-074.0	Camaro Silver Axle Holder DD CW	2
12	8.924-116.0	Foot Al DD Frame CW	1
13	9.802-064.0	Grommet, Rubber, Nozzle Holder	2
14	9.802-066.0	Pad Soft Rubber	2
15	9.802-817.0	Washer, 3/8" x 1"	4
16	9.196-041.0	Hex Head Bolt 3/8-16 x 1-3/4	2
17	9.197-003.0	3/8-16 Nylon Insert L/N zc 5um White ((HD 3.3/35 GB, HD 4.0/40 GB, HD 4.0/40 GeB)	4
	9.197-003.0	3/8-16 Nylon Insert L/N zc 5um White ((HD3.0/27 GB)	8
18	9.802-317.0	Engine, Honda, GX 200, 6.5 HP (HD 3.0/27 GB)	1
	8.750-680.0	Engine, Honda GX270, 9HP (HD 3.3/35 GB)	1
	8.750-580.0	Engine, Honda, GX390, 13hp (HD 4.0/40 GB)	1
	8.750-579.0	Engine, Honda GX390,13hp e/s 18a (HD 4.0/40 GeB)	1
19	9.802-714.0	Bolt, 5/16" x 1-3/4", NC HH (HD 3.0/27 GB)	4
	9.186-021.0	Hex Head Bolt 3/8-16 x 2" (HD 3.3/35 GB, HD 4.0/40 GB, HD 4.0/40 GeB)	4
20	9.802-806.0	Washer, 5/16" Flat, (HD3.0/27 GB)	8
	9.802-817.0	Washer, 3/8" x 1" (HD 3.3/35 GB, HD 4.0/40 GB, HD 4.0/40 GeB)	8
21	9.197-003.0	3/8-16 Ne Nylon Insert l/n zc 5um White (HD 3.0/27 GB)	8
	9.197-003.0	3/8-16 Ne Nylon Insert l/n zc 5um White (HD 3.3/35 GB, HD 4.0/40 GB, HD 4.0/40 GeB)	4
22	8.754-751.0	Pump, Leuco Lb3030r, 3.0@3000, 1650 rpm (HD 3.0/27 GB)	1
	8.750-755.0	Pump, Leuco Lm3540R.3, 3.5@ 4000 1850RPM (HD 3.3/35 GB)	1
	8.755-216.0	Pump, Leuco Lm3840r.3, 3.8@4000 1740 rpm (HD 4.0/40 GB)	1
23	9.802-720.0	Bolt, 3/8" x 1", NC hh	6
24	9.197-003.0	3/8-16 Ne Nylon Insert l/n zc 5um White	4
25	8.924-085.0	Under-Pump Slider	1
26	9.802-813.0	Washer, 5/16" Split Ring Lock, Zinc (HD 3.0/27 GB)	4
	9.802-816.0	Washer, 7/16", Split Ring Lock, Zinc (HD 3.3/35 GB, HD 4.0/40 GB, HD 4.0/40 GeB)	4
27	9.802-742.0	Bolt, 8mm x 20mm (HD 3.0/27 GB)	4
	9.802-744.0	Bolt, 10mm x 20mm, HH Zinc (HD 3.3/35 GB, HD 4.0/40 GB, HD 4.0/40 GeB)	4
28	8.755-199.0	Bolt,3/8 x 6" Carriage Zinc	1
29	8.924-086.0	Frame Front Slider	1
30	9.802-789.0	Nut, 3/8", Hex, nc	1
31	8.924-118.0	Al Back Beltguard Short BD CW	1
32	9.802-380.0	Pulley, BK 80 h (HD 3.0/27 GB)	1
	8.715-592.0	Pulley, 2BK 80h (HD 3.3/35 GB)	1
	8.715-591.0	Pulley, 2BK 70 h (HD 4.0/40 GB)	1
33	9.802-379.0	Pulley, BK 36 h (HD3.0/27 GB)	1
	9.802-384.0	Pulley, 2BK 40h (HD 3.3/35 GB, HD 4.0/40 GB, HD 4.0/40 GBe)	1
	9.802-385.0	Pulley 2BK 34H-S (HD 4.0/40GB, HD 4.0/40 GBe	

EXPLODED VIEW PARTS LIST

ITEM	PART NO.	DESCRIPTION	QTY
34	9.802-415.0	Belt, BX35 (HD 3.0/27 GB)	1
	8.715-695.0	Belt, BX34 (HD 4.0/40 GB)	2
	8.715-697.0	Belt, BX36 (HD3.3/35 GB)	1
35	9.802-402.0	Bushing, H x 24mm (HD 3.3/35 GB, HD 4.0/40 GB, HD 3.0/27 GB)	1
36	9.803-897.0	Bushing, H X 3/4 (HD3.0/27 GB)	1
	9.802-399.0	Bushing, H X 1 (HD 3.3/35 GB, HD 4.0/40 GB)	1
37	8.755-200.0	Nut,# 10 Spring ST BLK`	7
38	8.924-119.0	AL Front Beltguard Short BD CW (For All Belt Drive Models)	1
39	8.755-214.0	Screw,10-24X3/4	7
40	8.718-608.0	Bolt, 1/4-20 X 1-1/2", Carriage, Zinc (HD 3.3/35 GB, HD 4.0/40 GB, HD 4.0/40 GeB)	1
41	8.924-358.0	Camaro Silver Small Bracket	1
42	9.802-705.0	Bolt, 1/4"-20 x 1" Carriage Zinc (HD 4.0/40 GeB)	1
43	8.924-120.0	AL Battery Support CW (For All Belt Drive Models)	1
44	8.706-652.0	Battery Box, Small (HD 4.0/40 GeB)	1
45	8.750-247.0	Trigger Gun Model m407 (All Models)	1
46	8.783-039.0	Wand 30" Zinc Plated, Handle & Coupler (HD3.0/27 GB)	1
	8.783-040.0	Wand 44" Zinc Plated, Handle & Coupler (HD 3.3/35 GB, HD 4.0/40 GB, HD 4.0/40 GeB)	1
47	8.916-740.0	Hose 3/8"X50,1W,TS,SO-SW	1
48	9.802-166.0	Coupler, 3/8" Socket, Female, Brass	1
49	9.802-170.0	Coupler, 3/8" Plug, Female, Steel Zinc	1
50	9.802-169.0	Coupler, 3/8" Socket, Male, Brass	1
51	5.731-652.0	Filter with weight	1
52	6.388-216.0	Hose DN 5	3.2ft
53	9.802-216.0	Injector, Chem, Non Adj, 0.083	1
54	8.924-266.0	Bracket Battery Small (HD 4.0/40 GeB)	1
55	8.755-219.0	Battery, Sealed, D18S (HD 4.0/40 GeB)	1
56	9.802-706.0	Bolt, 1/4-20 X 1-3/4" Carriage Zinc (HD 3.0/27)	1
	8.730-042.0	Bolt Carriage, 1/4-20 X 2-1/2" Zinc (HD 3.3/35 GB, HD 4.0/40 GB, HD 4.0/40 GeB)	1
57	9.804-627.0	Nozzle, SACQMEG, 000375, Red (HD 3.3/35 GB, HD 3.0/27 GB)	1
	8.712-345.0	Nozzle, SAQCMEG 0004, Red (HD 4.0/40 GB, HD 4.0/40 GeB)	1
	9.804-624.0	Nozzle, SAQCMEG 150375, Yellow (HD 3.3/35 GB, HD 3.0/27 GB)	1
	8.712-346.0	Nozzle, SAQCMEG 1504, Yellow (HD 4.0/40 GB, HD 4.0/40 GeB)	1
	9.804-625.0	Nozzle, SAQCMEG, 250375, Green (HD 3.3/35 GB, HD 3.0/27 GB)	1
	8.712-347.0	Nozzle, SAQCMEG 2504, Green (HD 4.0/40 GB, HD 4.0/40 GeB)	1
	8.712-340.0	Nozzle, SAQCMEG 4003.5, White (HD3.0/27 GB, HD 3.3/35 GB)	1
	8.712-348.0	Nozzle, SAQCMEG 4004, White (HD 4.0/40 GB, HD 4.0/40 GeB)	1
	8.712-398.0	Nozzle Black, QCEM-6540 Mess. (CHEM)	1
	9.804-626.0	Nozzle, SACQMEG, 400375, WHITE (HD 3.0/27 GB)	1
	8.712-337.0	Nozzle, SAQCMEG 0003.5, Red (HD 3.3/35 GB)	1
	8.712-338.0	Nozzle, SAQCMEG 1503.5, Yellow (HD 3.3/35 GB)	1
	8.712-339.0	Nozzle, SAQCMEG, 2503.5, Green (HD 3.3/35 GB)	1
58	8.718-607.0	Bolt, 1/4-20 X 3/4", Carriage	9
59	9.802-807.0	Washer, 3/8", Flat Zinc	4
60	9.198-004.0	3/8 USS F/W Zinc	4
61	9.198-014.0	Washer 21/64 X 1"	4
62	9.802-073.0	Weatherstrip, 1/8" x 1/2"	12"

PUMP ASSEMBLY EXPLODED VIEW

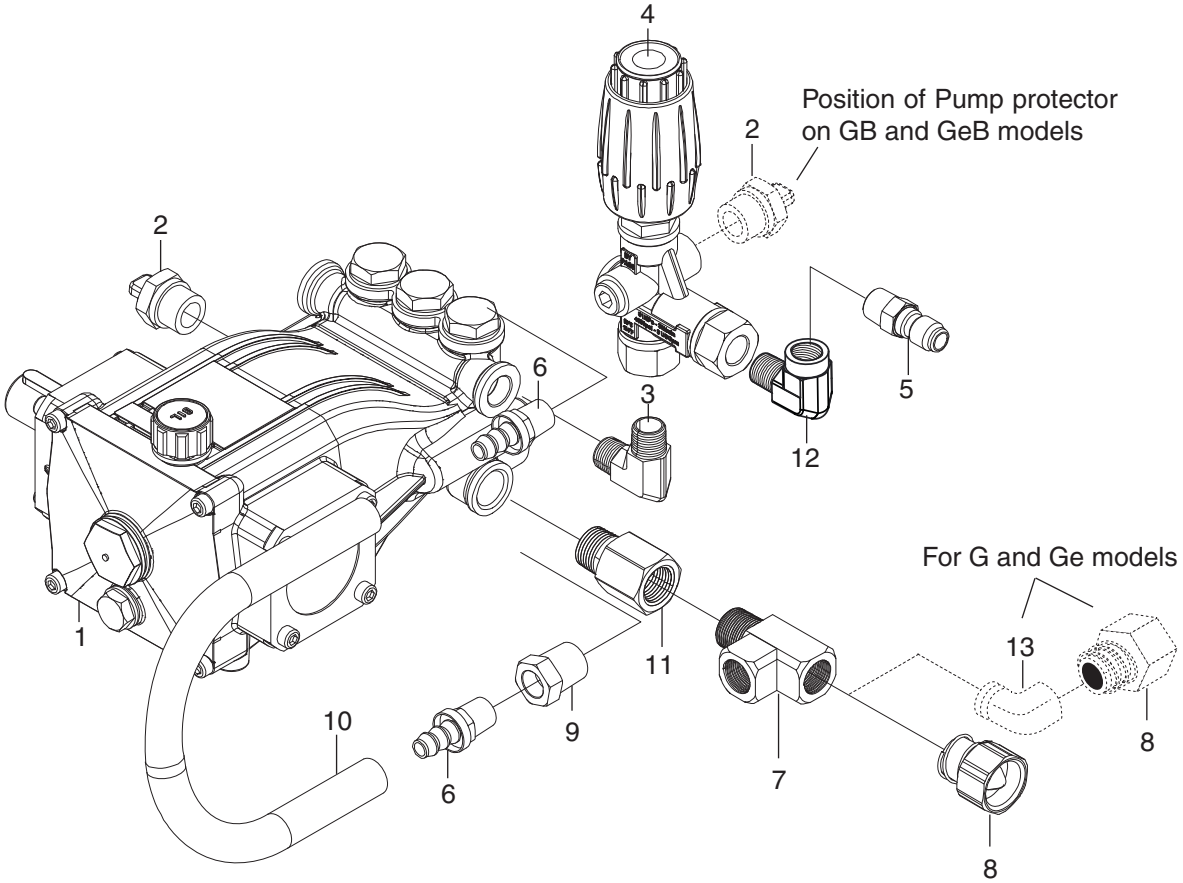

PUMP ASSY EXPLODED VIEW PARTS LIST

ITEM	PART NO.	DESCRIPTION	QTY
1	8.754-751.0	Pump, Leuco LB3030R, 3.0@3000, 1650 RPM (HD 3.0/27 GB)	1
	8.750-755.0	Pump, Leuco LM3540R.3 3.5@ 4000 1850RPM (HD 3.3/35 GB)	1
	8.755-216.0	Pump, Leuco LM3840R.3, 3.8@4000 1740 RPM (HD 4.0/40 GB)	1
	8.754-756.0	Pump, Leuco LP3035G, 3.0@3500, 3400 RPM (HD 3.0/27 G)	1
	8.754-758.0	Pump, Leuco LP3535G1, 3.5@3500, 3400RPM (HD 3.4/35 G)	1
	8.750-753.0	Pump, Leuco LS4040G. 3, 4@4000, 3400 RPM (HD 4.0/40 G, HD 4.0/40 GE)	1
2	8.707-256.0	Pump protector,1/2" (HD 3.0/27G, HD3.4/35G, HD4.040G, HD4.0/40Ge)	1
	8.707-254.0	Pump protector,3/8" (HD3.0/27 GB, HD3.3/35 GB, HD4.0/40GB, HD4.0/40GBe)	1
3	8.706-168.0	Elbow, 3/8" NPT-p/n-tf3529x6 Steel (All Models)	1
4	8.750-299.0	Unloader, Vrt3, 8 GPM @4500 psi (All Models)	1
5	9.802-171.0	Coupler, 3/8" Clug, Male, Steel/zinc (All Models)	1
6	8.706-944.0	Hose Barb, 3/8' barb x 3/8' ml pipe (All Models)	2
7	8.706-860.0	Tee, 1/2" Street, Brass (All Models)	1
8	9.802-146.0	Swivel, 1/2" mp x 3/4" ghf w/Strainer (All Models)	1
9	8.706-917.0	Bushing, 1/2" x 3/8", Brass p/n-5406 (All Models)	1
10	8.711-785.0	Hose, 3/8" Push on, per ft (All Models)	18''
11	8.706-984.0	Adapter, 1/2" fptx 1/2" mpt, Brass (HD 3.0/27 G, HD 3.0/27GB, HD, HD 3.4/35 G)	1
12	8.706-207.0	Elbow, 3/8", Street 90 deg,Steel (HD 3.0/27 G,HD 3.4/35 G, HD 4.0/40 G, HD 4.0/40 Ge)	1
13	8.706-829.0	Elbow, 1/2" Street, Brass (HD3.0/27G,HD 3.4/35G, HD4.0/40G, HD4.0/40Ge)	1

LM.3 SERIES PUMP EXPLODED VIEW

8.750-755.0 LM3540R.3
8.755-216.0 LM3840R.3

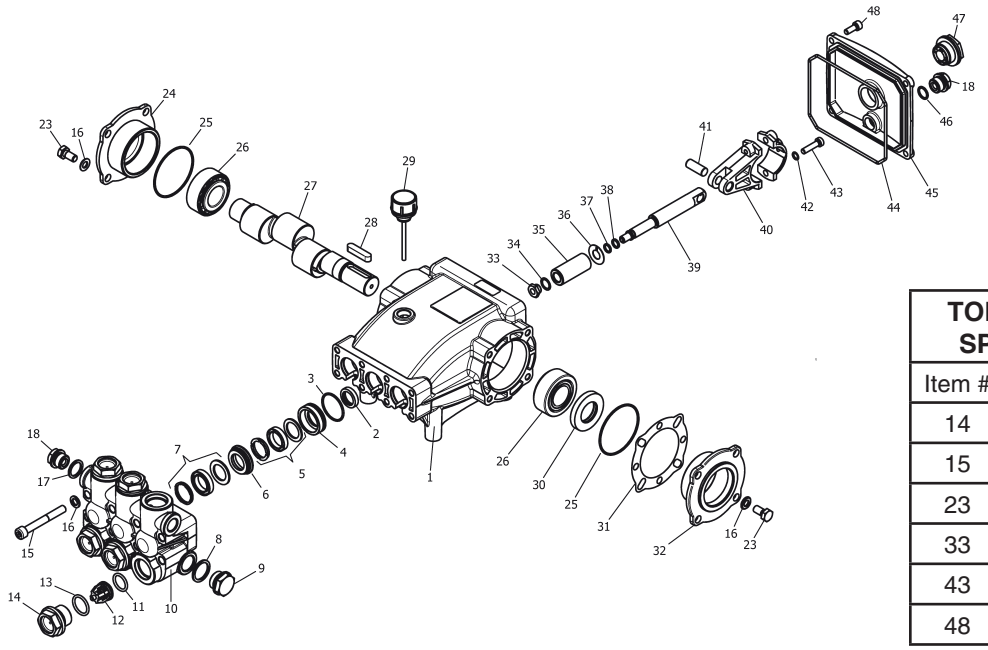

TORQUE SPECS	
Item #	Ft.-lbs
14	75
15	18
23	6
33	6
43	6
48	6

PUMP PARTS LIST

ITEM	PART NO.	DESCRIPTION	QTY
1	8.751-216.0	Crankcase	1
2	See Kits Below	Plunger Oil Seal	3
3*	See Kits Below	O-Ring Ø1.78 x 31.47	3
4*	See Kits Below	Pressure Ring	3
5*	See Kits Below	U-Seal	3
6*	See Kits Below	Intermediate Ring	3
7*	See Kits Below	U-Seal	3
8	9.803-199.0	Washer, Copper	1
9	9.802-926.0	Plug, Brass 1/2	1
10	8.751-218.0	Manifold Head	1
11*	See Kits Below	O-Ring Ø2.62 x 17.13	6
12*	See Kits Below	Valve Assembly	6
13*	See Kits Below	O-Ring Ø2.62 x 20.29	6
14	9.802-928.0	Valve Plug	6
15	9.802-938.0	Manifold Stud Bolt	8
16	9.802-884.0	Washer	16
17	9.803-198.0	Copper Washer 3/8	1
18	9.802-925.0	Brass Plug 3/8	1
23	9.802-944.0	Screw, Hex,8mm x18mm	8
24	8.717-210.0	Closed Bearing Housing	1
25	9.803-192.0	O-Ring Ø1.78 x 60.05	2
26	8.933-011.0	Tapered Roller Bearing	2
27	8.751-222.0	Crankshaft (LM3840R)	1
	8.751-223.0	Crankshaft	1
28	9.803-167.0	Crankshaft Key	1
29	9.802-921.0	Oil Dip Stick	1

ITEM	PART NO.	DESCRIPTION	QTY
30	9.803-140.0	Crankshaft Seal	1
31	9.803-178.0	Shim	2
32	8.717-209.0	Bearing Housing	1
33*	See Kits Below	Plunger Nut, M8	3
34*	See Kits Below	Copper Spacer	3
35*	See Kits Below	Plunger	3
36*	See Kits Below	Copper Spacer	3
37*	See Kits Below	O-Ring Ø1.78 x 7.66	3
38*	See Kits Below	Teflon Ring	3
39	8.751-224.0	Plunger Rod	3
	8.751-225.0	Plunger Rod (LM3540R.3)	3
40	9.803-158.0	Connecting Rod	3
41	8.751-228.0	Connecting Rod Pin	3
42	9.803-218.0	Spring Washer	6
43	9.803-238.0	Connecting Rod Screw	6
44	8.933-016.0	O-Ring, Ø2.62 x 126.67	1
45	8.751-229.0	Crankcase Cover	1
46	9.803-197.0	O-Ring, Ø1.78 x 14	1
47	9.803-202.0	Sight Glass 3/4	1
48	9.802-939.0	Cover Screw	5

REPAIR KIT NO.	8.725-358.0	8.725-359.0	8.933-023.0	9.802-603.0	9.802-609.0
KIT DESCRIPTION	Plunger Seal 15mm	Complete Seal Packing 15mm	Plunger 15mm	Complete Valve	Plunger Oil Seals
ITEM NUMBERS INCLUDED	3, 5, 7	3, 4, 5, 6, 7	33, 34, 35, 36, 37, 38	11, 12, 13	2
NO. OF CYLINDERS KIT WILL SERVICE	3	1	1	6	3

VRT3 UNLOADER EXPLODED VIEW AND PART S LIST

8.750-297.0, 8 GPM, 2320 PSI
8.750-298.0, 8 GPM, 3630 PSI
8.750-299.0, 8 GPM, 4500 PSI

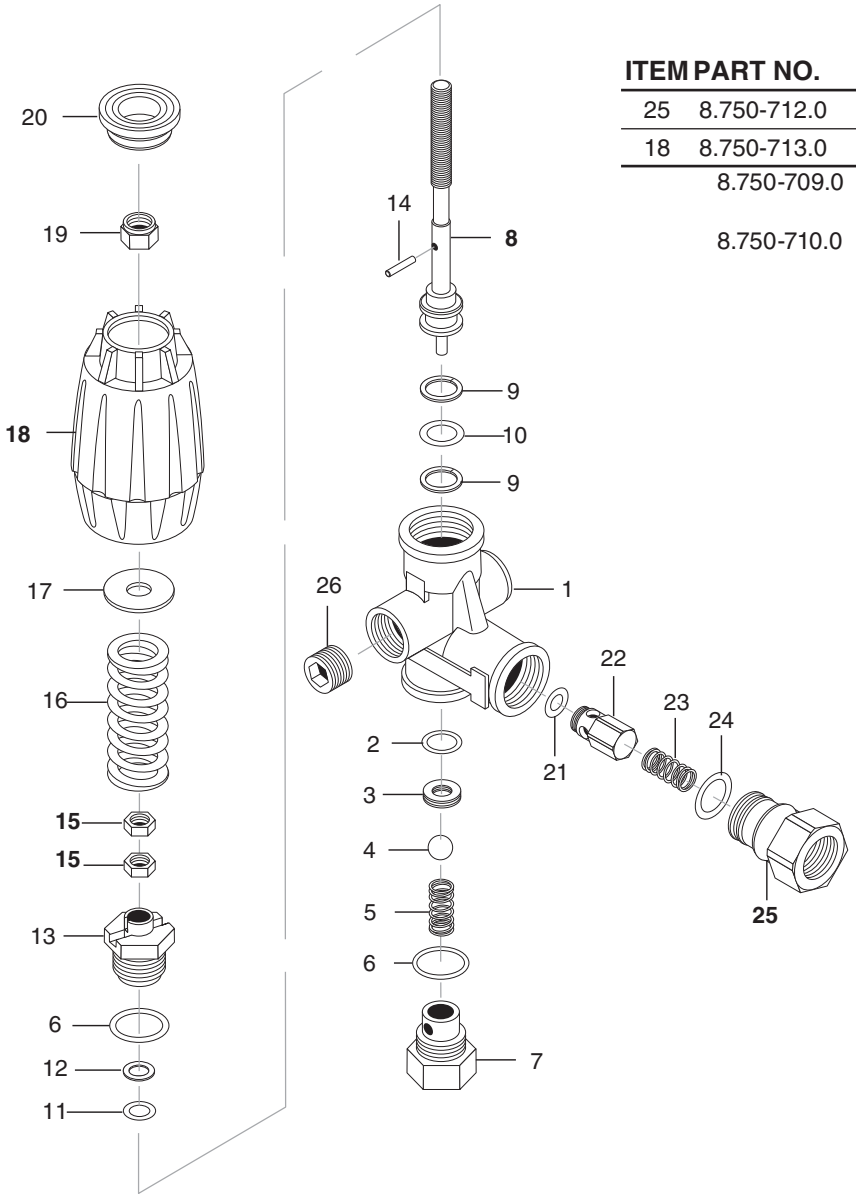

ITEM	PART NO.	DESCRIPTION	QTY
25	8.750-712.0	Outlet Fitting	1
18	8.750-713.0	Knob, Unloader	1
	8.750-709.0	Repair Kit, VRT3, 2320/3630 PSI	
	8.750-710.0	Repair Kit, VRT3, 4500 PSI (Kit Items: 1, 4, 8-12, 16, 21-22)	

Unloader Adjustment Procedures

1. Remove lock nut (Item 19).
2. Remove adjustment knob (Item 18).
3. Loosen the two (2) nuts (Item 15), move them upward on stem (Item 8) until you see 4 or more threads below the nut.
4. Re-attach adjusting knob (Item 18).
5. Start machine. Open the trigger of the spray gun. Increase pressure by turning adjustment knob (Item 18) clockwise until pressure is at the desired operating pressure.
6. Remove the adjustment knob (Item 18), tighten the lower nut (Item 15) tightly against the upper nut (Item 15). Reattach adjustment knob (Item 18) and screw down until contact is made with the nuts (Items 15). Screw down lock nut (Item 19) onto the stem (Item 8) until the threads cut into the nylon insert of the lock nut (Item 19).

*If adjustment knob (Item 18) DOES NOT make contact with upper nut (Items 15), remove adjusting knob (Item 18), re-adjust (raise) nuts (Items 15) on stem (Item 8) and re-attach adjustment knob (Item 18), then repeat step #6.

**If adjustment knob (Item 18) DOES make contact with upper nut; release the trigger of the spray gun and watch the pressure gauge for the pressure increase (“spike”). This “spike” SHOULD NOT exceed 500 psi above the operating pressure. If “spike” pressure exceeds the 500 psi limit, remove the adjusting knob (Item 18) and re-adjust (lower) the nuts (Items 15) on the stem (Item 8).

Re-attach the adjusting knob (Item 18), then repeat step #6.

TROUBLESHOOTING

For Models: HD3.0/27 GB, HD 3.3/35 GB, HD 4.0/40 GB, HD 4.0/40 GeB

PROBLEM	POSSIBLE CAUSE	SOLUTION
LOW OPERATING PRESSURE	Faulty pressure gauge	Install new gauge.
	Insufficient water supply	Use larger supply hose; clean filter at water inlet.
	Old, worn or incorrect spray nozzle	Match nozzle number to machine and/or replace with new nozzle.
	Belt slippage	Tighten or replace; use correct belt.
	Plumbing or hose leak	Check plumbing system for leaks. Re-tape leaks with teflon tape.
	Faulty or mis-adjusted unloader valve	Adjust unloader for proper pressure. Install repair kit when needed.
	Worn packing in pump	Install new packing kit.
	Fouled or dirty inlet or discharge valves in pump	Clean inlet and discharge valves.
	Worn inlet or discharge valves	Replace with valve kit.
	Obstruction in spray nozzle	Remove obstruction.
	Leaking pressure control valve	Rebuild or replace as needed.
	Slow engine RPM	Set engine speed at proper specifications.
	Pump sucking air	Check water supply and possibility of air seepage.
	Valves sticking	Check and clean or replace if necessary.
	Unloader valve seat faulty	Check and replace if necessary.
FLUCTUATING PRESSURE	Worn or dirty pump valves	Call local distributor.
	Nozzle is obstructed	Blow out or remove debris with fine needle.
	Pump sucking air, inlet hose leaking	Check that all hoses and fittings are airtight. Turn off machine and trigger spray gun until a steady flow of water emerges through the nozzle.
	Insufficient water supply	Turn water on full force. Check garden hose for kinks, leaks or blockage.
PRESSURE LOW AFTER PERIOD OF NORMAL USE	Nozzle worn	Replace nozzle.
	Unloader valve worn	Replace unloader valve.
ENGINE WILL NOT START OR STOPS WHILE OPERATING	Low oil shutdown	Fill engine with oil.
	Out of gas	Fill fuel tank.
	Water in gasoline	Drain gas tank; fill with clean fuel.
ENGINE IS OVERLOADED	Nozzle partially blocked	Clean nozzle.
	Excessive pressure from high engine RPM	Adjust engine throttle to lower RPM.

TROUBLESHOOTING

For Models: HD3.0/27 GB, HD 3.3/35 GB, HD 4.0/40 GB, HD 4.0/40 GeB

PROBLEM	POSSIBLE CAUSE	SOLUTION
WATER OR OIL LEAKING FROM BOTTOM OF PUMP	A small amount of leaking is normal	If excessive leaking occurs, call local distributor.
PRESENCE OF WATER IN PUMP OIL	Water sprayed at machine	Change oil. Direct spray away from machine.
	High humidity in air	Check and change oil twice as often.
	Piston packing worn. Oil seal worn.	Call local distributor.
ENGINE OPERATES FOR 15 MINUTES THEN STOPS	Not enough gas or engine oil	Fill tank with gas. Check oil level.
	Vapor lock developed by heat of day	Keep gas tank full to avoid vapor locking.
	Obstruction in fuel filter	Clean or replace fuel filter.
ENGINE LACKS POWER	Dirty air filter	Replace air filter.
ENGINE FALTERS	Choke is opened too soon	Move choke to halfway position until engine runs smoothly.
WATER DRIPPING FROM UNDER PUMP	Piston packing worn	Call local distributor.
	O-Ring plunger retainer worn	Call local distributor.
	Cracked piston	Call local distributor.
OIL DRIPPING FROM UNDER PUMP	Oil seal worn or damaged	Call local distributor.
WATER LEAKING FROM PUMP PROTECTOR	Spray gun closed with machine running 5 minutes or longer	Open spray gun or turn off machine.
	Excess water supply pressure	Place a pressure regulator at end of 50' garden hose.
NO DETERGENT	Detergent suction tube not properly connected to machine	Check connection.
	Detergent is too thick	Dilute detergent. For best results, use manufacturers detergent.
	Detergent filter valve is at lowest setting	Set detergent filter valve to a higher setting.
	Filter on detergent suction tube is clogged	Run warm water through filter to remove debris.
	Damaged or clogged detergent suction tube	Remove obstruction or replace detergent suction tube.
	A high pressure nozzle is attached.	Replace with black detergent nozzle.
	Discharge nozzle is obstructed	Blow out or remove debris with fine needle.
GARDEN HOSE CONNECTION LEAKS	Loose fittings	Tighten fittings.
	Missing/worn rubber washer	Insert new washer.

TROUBLESHOOTING

For Models: HD3.0/27 GB, HD 3.3/35 GB, HD 4.0/40 GB, HD 4.0/40 GeB

PROBLEM	POSSIBLE CAUSE	SOLUTION
SPRAY WAND LEAKS	Spray wand not properly attached	Slide the spray wand into the gun. Turn the wand collar clockwise onto the spray gun threads until tight.
	Broken o-ring	Call local distributor and order an o-ring.
PUMP IS NOISY	Pump is sucking air	Check that hoses and fittings are air tight. Turn off machine and purge pump by squeezing trigger gun until a steady flow of water emerges through nozzle.

PREVENTATIVE MAINTENANCE

HD3.0/27 GB, HD 3.5/35 GB, HD 4.0/40 GB, HD 4.0/40 GeB

This pressure washer was produced with the best available materials and quality craftsmanship. However, you as the owner have certain responsibilities for the correct care of the equipment. Attention to regular preventative maintenance procedures will assist in preserving the performance of your equipment. Contact your dealer for maintenance. Regular preventative maintenance will add many hours to the life of your pressure washer. Perform maintenance more often under severe conditions. Check pump oil and engine oil level before first use of your new pressure washer.

MAINTENANCE SCHEDULE		
Engine Oil	Inspect	Daily
	Change	First month or 20 hours. Every 100 hours or every 6 months after first month
	Filter	Every 50 hours
Air Cleaner/Filter	Inspect	Daily
	Clean	Every 3 months or 50 hours
Engine Fuel Filter		500 hours or 6 months
Spark Plug Maintenance	Inspect	Every 6 months or 100 hours
	Change	Every year or 300 hours
Clean Fuel Tank(s)		Annually
Pump Oil	Inspect	Oil level daily
	Change	After first 50 hours, then every 500 hours or annually (or 3 months)
Replace High Pressure Nozzle		Every 6 months
Replace Quick Connects		Annually
Clean Water Screen/Filter		Weekly
Replace HP Hose		Annually (if there are any signs of wear)
Belts*	Tighten	Every 6 months
	Inspect/Replace	Every 6 months

***Note:** When servicing belts, don't exceed 14 lb-ft on pump mounting screws.Failure to do so will cause pump thread damage.

KNA, Inc.4555 Airport Way Denver, CO 80239

Form #9.801-760.0 • Rev. 03/16 Printed in U.S.A. or Mexico